NEW HOLLAND AGRICULTURE

T7 HD with PLM

Sales Information Manual

Contents

Engine……1- 2

Transmissions……3

Power Take Off……4

Hydraulics……5

Front Linkage……6

Auto Pick Up Hitch……7

Front & Rear Axles……8- 10

Operators Cab……11

Rear Power Sockets ……12

Ballast ……13

Engine

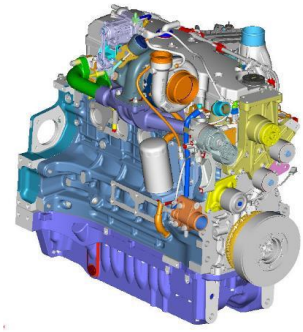

- **Stage V** Emission level - . Stage V regulation started from 2019 (power range above 130kW and below 56kW) and 2020 (power from 56 to 130kW) further tightening the limits on PM (Particulate Matter) emission (-40% compared to Stage IV) and introducing a new limit on the number of emitted particle (Particle Number, PN) (1x10^12 / kWh)

- **ATS Components**- Hi-eSCR2 is the ATS system developed by FPT to comply with Stage V regulation, which lays its basis on the Hi-eSCR system utilized on Stage IV engines. To comply with the tightened limits on PM, a maintenance-free filtering device is integrated on the SCR catalyst. The whole ATS system will maintain same after-treatment dimensions of the current Stage IV applications, requiring no machine redesign nor layout changes. Thanks to **no** EGR and optimised combustion, the engine produces a low amount of PM reducing the risk of ash accumulation and allowing the SCRoF solution to be maintenance-free, not requiring mechanical cleaning nor replacement over the useful life of the tractor.

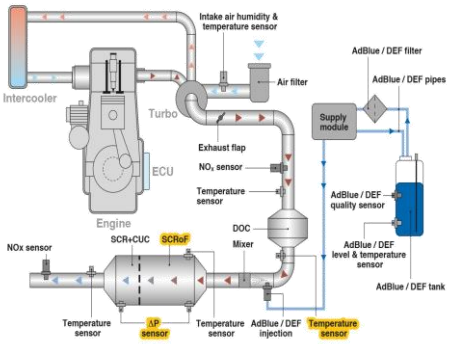

- **Fuel Injection**: The Bosch High Pressure Common Rail (HPCR) fuel system pioneered by Fiat Auto is the latest in fuel injection system, fitted to all engines, the electronic module is programmed to provide optimum engine performance.

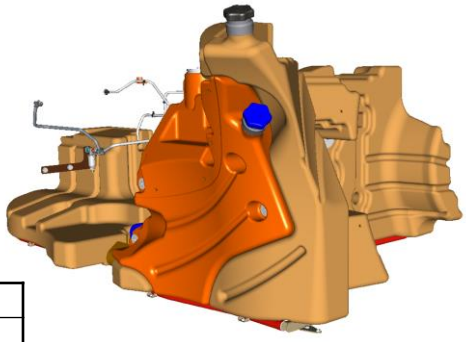

- **Fuel Tank**: A wide diameter fuel filler point is conveniently located on the left hand of the tractor. High capacity fuel tanks mean a longer work period between re-fuelling stops. The location of the filler is convenient and eliminates problems linked with diesel spillage.

Fuel Tank Capacity	Fuel Tank
Standard Fuel Capacity (litres)	630
Main only on T7.275	418

- **AdBlue**: The 96 LTR urea tank is conveniently located on the same side of the vehicle as the fuel tank, its capacity is such that it is sufficient for every two fills of the diesel tank. The tank has been specially designed to ensure adequate air space for expansion no matter whether it is filled from a pump or by hand from a can.

Engine Specifications

Make			FPT		
Emission Level (tier)			Stage 5		
Model No			T7.290 AC	T7.315 AC	T7.275 AC
Number of valves per cylinders			4		
Number of cylinders			6		
Displacement (cm^3)			6728		
Rated Speed (rpm) [1]			2100		
High Idle Speed (rpm) [1]			2250		
Low Idle Speed (rpm) Engine [4]			650/850		
Engine power & Torque to Spec ECE R120 [3]	kW	Rated Power (kw) @2100	199	221	184
		Max Power kw @ 1800 rpm	212	230	201
	bhp	Rated Power (hp) @2100	267	296	247
		Max Power hp @ 1800rpm	284	308	269
	cv	Rated Power (cv)@2100	271	300	250
		Max Power cv @1800rpm	288	313	273
	Torque	Max Torque (Nm@1400rpm)	1194	1282	1173
		Torque Rise (%) [2]	32%	28%	40%
PTO Power	kW	Nominal PTO Power @2100 engine rpm	185	205	184
	bhp		248	275	247
	cv		252	279	250
Block Type			Structural		
Lubrication Type			Concentric pump		
Oil Specification			CNH MAT3521; API CJ4 - 10W40 / 15W 40		
Oil capacity (litres)			19		

Bio Diesel: To support the strategy of having 2 to 5% of European diesel stock provided from energy crops (Oil seed rape) the following applies to all LWB Tractors.

Up to B7 (7%)	Approved
Up to B20 (20%)	Not Approved
Up to B100 (100%)	Not Approved

Bio diesel fuel must conform to EN 14214 prior to blending.

Bio diesel fuel must be handled and maintained per published Service Bulletins.

Note that COLD PRESSED Bio diesel fuels are NOT RECOMMENDED.

Idle Speed Management: To further reduce fuel consumption and operating costs the low idle feature has been incorporated, This logic will reduce the low idle speed from 850 to 650 rpm. Studies of actual on farm tractor usage has shown that vehicles can spend a significant proportion of the operating hours in neutral and idle condition.

The feature can be disabled by dealer using H menu configurations if required.

Transmissions

CVT Transmission: The 50Km/h and 40Km/h ECO versions are designed with four ranges in forward and two ranges in reverse to cover the overall vehicle speed range without steps. The high number of mechanical ranges available are intended to provide a good towing force at low vehicle speed and max allowed vehicle speed on road at reduced engine speed for operator comfort and reduced fuel consumption. In addition, the high number of mechanical ranges assures to find the best efficiency point of the overall transmission regardless the tractor working condition (speed, load etc,…)..

Reserve Capacity	CVT	
	Tank Capacity @Max Oil Level [litres]	**148**
	Delta between Max and Min [litres]	8
	Delta between Max and Extra [litres]	18
	Removable Quantity (from extra)	70

Transmission Speed: Available as two options, 50Km/h and 40Km/h ECO versions.

CCM CVT 4x2 50 km/h ECO - Gear ratio schematic

Ranges		Gearbox ratio	Rear axle ratio	Total ratio	Tyre index radius [m] 0.000	0.975	1.025
					Vehicle speed [km/h]		
Forward	F1	0	43.997	0	0.0	0.0	0.0
		1.603		70.528	0.0	11.5	12.1
	F2	1.603		70.528	0.0	11.5	12.1
		1.086		47.781	0.0	16.9	17.8
	F3	1.086		47.781	0.0	16.9	17.8
		0.577		25.386	0.0	31.9	33.5
	F4	0.577		25.386	0.0	31.9	33.5
		0.291		12.803	0.0	52.5 ●	52.5 ●
Reverse	R1	0.000		0.000	0.0	0.0	0.0
		1.351		59.440	0.0	13.6	14.3
	R2	1.351		59.440	0.0	13.6	14.3
		0.659		28.994	0.0	27.9	29.3

● MAX. VEHICLE SPEED IS ELECTRONICALLY LIMITED VIA ENGINE SPEED AND/OR TRANSMISSION RATIO.

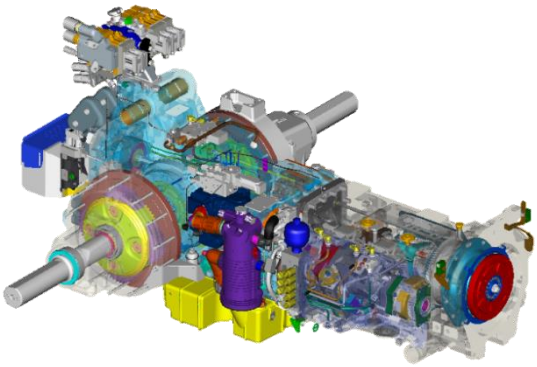

Intelligent Trailer Brake (CVT Transmission): The Intelligent Trailer Brake System's aim is to improve tractor and trailer stability whilst decelerating with the CVT and engine braking alone. The ITBS estimates the Deceleration Force by comparing the target vehicle speed versus actual vehicle speed whenever the driver requests a speed decrease, either by the CommandGrip or by releasing the drive pedal, The system adjusts the brake force applied with a measurement of transmission input torque, based on the flywheel torque sensor and Engine Control Unit data. With this information the trailer is braked with the appropriate pressure in order to improve the stability of the tractor and trailer combination.

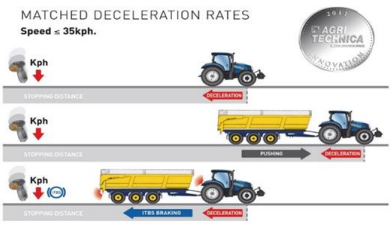

For Tractor Mother Regulation (MY18) Auto Command tractors the **Intelligent Trailer Brake System (ITBS)** feature is now available as an option, Factory installed or Dealer unlock. – DIA Unlock code 48178349

Power Take Off

- **4 Speed PT0:**

All T7 HD tractors are offered with a 4 speed PTO, (1000/1000E/540/540E) this is electric shiftable. The PTO switch is located on the RH arm rest console and engagement is achieved by lifting the switch and then pushing it forward. Three shafts can be installed into the rear of the tractor, 6 or 21 spline, 35mm (13/8”) in diameter, or 20 spline 1 3/4" diameter To change shafts a retaining circlip is removed, the shafts swapped, and the circlip replaced.
Rotation is Clockwise as viewed from the rear of the tractor .

Engine speed at PTO speed	540 rpm	1871rpm
	540 economy rpm	1598rpm
	1000 rpm	1853rpm
	1000 economy rpm	1583rpm

- **Auto PTO:** The Auto PTO function, when selected, provides automatic engagement & disengagement of the rear PTO when using the three point linkage. Raising the 3 point linkage to a certain level will stop PTO rotation & lowering the linkage will restart the rotation. The stop/start position is adjustable and will be stored by the system.

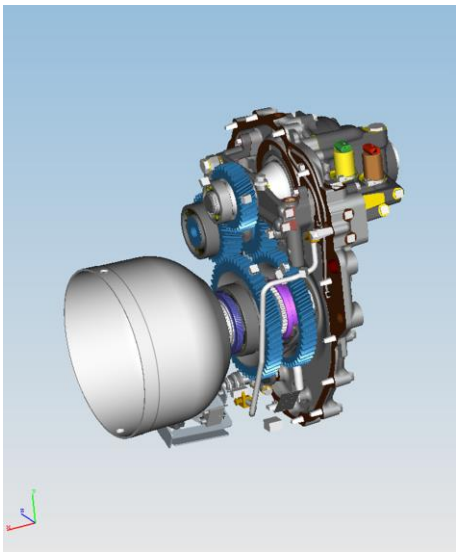

- **Front PTO:** For tractors fitted with front linkage& PTO, a 6-spline shaft is provided. The CCW PTO shaft rotates at 1000rpm in an anticlockwise direction, (when looking from the front of the tractor). The front PTO is driven directly from the crankshaft and is actuated by an independent oil immersed clutch. The maximum PTO capacity is 220hp. (162KW)

Engine speed CCW	1000 rpm	@1886 erpm
	1000 economy rpm	@1585 erpm
Engine speed CW	1000 rpm	@1896 erpm
	1000 economy rpm	@1584 erpm

Hydraulics

- **Closed Centre Load Sensing (CCLS):** The CCLS variable displacement piston pump is externally mounted for easy service and provides instant high flow upon demand. If there is no demand the pump runs at low pressure & no flow, thus absorbing little power. This feature also provides reduced oil temperatures and a better response at low engine speeds

Variable displacement piston pump "165"L/m - CVT transmission		
High Pressure Circuit	Max Pump flow * (l/min)	165
	Max pump pressure (bar) @ rated rpm	215
	N. of closed centre remote valves	5
	Electronic draft control	EDC
	Max flow available @ remotes* (l/min)	140-210
	Max flow available @ one rem* (l/min)	140

Variable displacement piston pump "220"L/m - CVT transmission - allows for lower Engine running speed		
High Pressure Circuit	Max Pump flow * (l/min)	220
	Max pump pressure (bar) @ rated rpm	215
	N. of closed centre remote valves	5
	Electronic draft control	EDC
	Max flow available @ remotes* (l/min)	140-210
	Max flow available @ one rem* (l/min)	140

- **Rear Remotes:** Four or Five electronic remote valves, are available, Each valve has a flow control & can be coupled or uncoupled under pressure via a dual active lever. Non leak down valves are provided to ensure a raised implement will stay at a pre-set height. End plate Power Beyond ISO is availble (without quick couplers mounted).

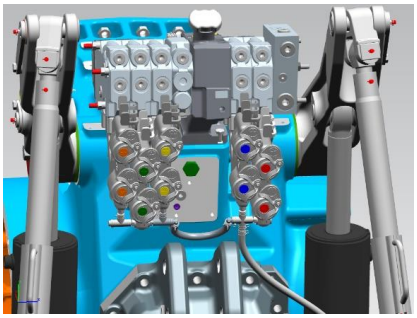

- **Mid Mount Valves:** One, Two or Three Mid Mount Valves can be specified (3 shown in the picture) Each valve has a flow control & can be coupled or uncoupled under pressure. Non leak down valves are provided to ensure raised implement will stay at a pre-set height.

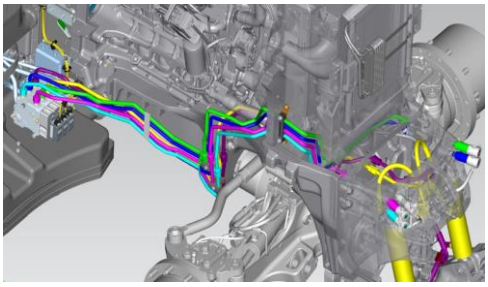

- **Hydraulic Top Link:** A hydraulic top link is available and is connected vis 2 quick couplers on the remote valve block, this does not require the use of 1x spool valve. All valves are free to utilise.

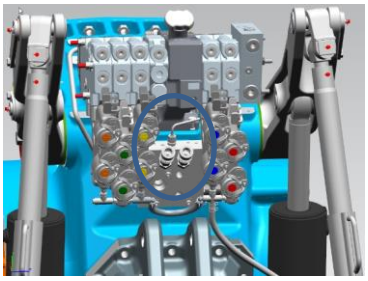

Integrated Front Linkage

- **FHPL:** A heavy-duty front linkage and PTO system is available for all models. The close coupled linkage is incorporated into the front support casting and incorporates two large diameter, double acting cylinders that provide lift through the full range. An accumulator is fitted in the lift circuit to act as a form of suspension and limit shock loads. The front lift system is operated by Mid mount valve #1

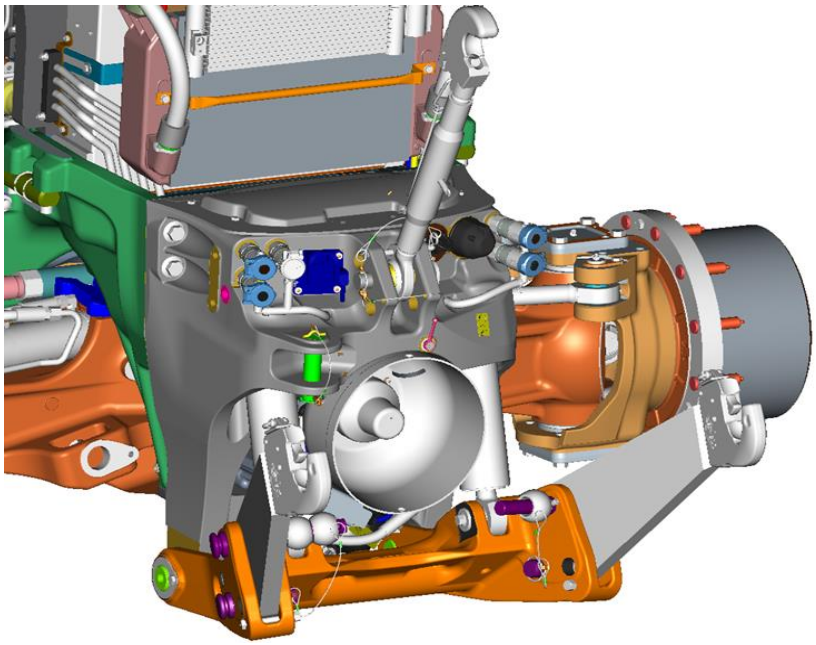

TRACTOR	Max Lift At lower links ball end		Max.through full range at the ball end		Max.through full range 610mm from the ball end	
Hook Type	quich attach		quich attach		quich attach	
T7-HD Range 856mm	59.00	KN	43.00	KN	41.00	KN
	6016	Kgf	4385	Kgf	4181	Kgf
	5.8	Ton	4.1	Ton	4.4	Ton

- **Front Linkage Options:**

- **2x Sets front couplers**
- **½ inch free flow return**
- **IsoBus Implement socket**
- **3 pin D socket (EU)**
- **7 Pin lighting socket (EU)**

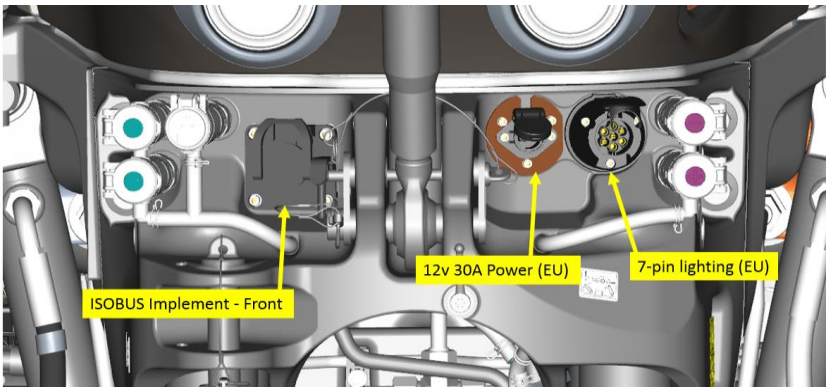

Automatic Pick Up Hitch - APUH

- **APUH:** A hydraulic type APUH that moves rearwards via a hydraulic ram is available. This improves visibility of the hitch hook from the operators seat and makes hook up easier. The pick up hitch is raised and lowered by means of the tractor hydraulic system and is fully self-supporting when locked in the operating (raised) position.

Ground clearance max (mm)	562
PTO to top of drawbar (mm)	454
Dia of drawbar pin hole	Cat. 2: 33; Cat. 3: 41
Max load on the hook (Kg)	3000
Max load drawbar (kg)	2000
Max load ball 80 (kg)	4000

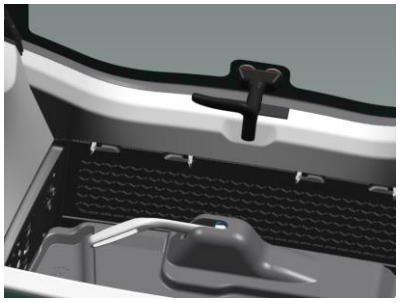

- **Operation:** A handle is mounted to the rear RH side of the operator seat, this releases the locking pin allowing the hitch to drop. Once lowered the hitch can be powered in or out. On all models the pick up hitch is piped directly into a hydraulic diverter valve, this frees up all spool valves for use. The configurable buttons on the rear fender can be set to operate the hitch from the rear.

- **K80 Ball:** A K80 ball hitch can be fitted if required, this will need to be a parts department order. The K80 ball is normally used on heavy tankers or trailed sprayers, sometimes its termed as a ball and spoon hitch.

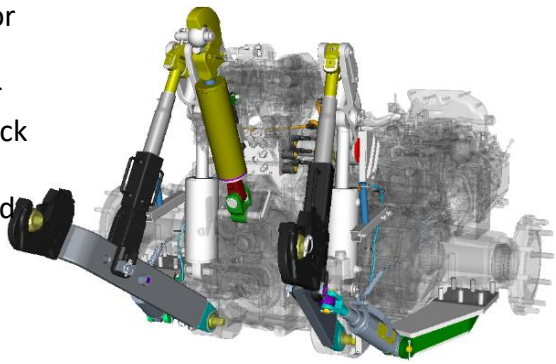

- **Rear Linkage:** A Cat 4n rear linkage is offered, Each lower link has holes for attachment of the lift rods. The front hole for maximum lift height and the rear hole for maximum lift capacity. A hydraulic top link is offered. There is an option for automatic hydraulic telescopic stabilisers that can be set to lock up, centralise and eliminate sway in raised transport position and revert to the sway setting when the implement is dropped to the working position the lock position can be set in the screen.

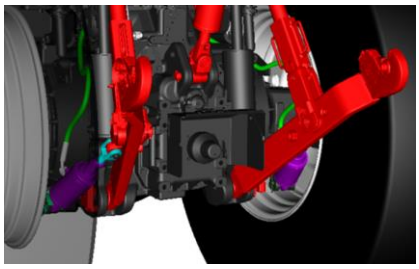

Front Axle

- **Suspended Front Axle:** The front axle suspension system is designed to maintain performance under all conditions by providing improved traction in the field and increased stability at higher transport speed. It has 55 mm of compression travel and a total of 110mm of suspension movement, standard features include automatic self-levelling according to load and controlled damping via advanced accumulator on piston and rod side for a smoother ride. A manual override is fitted, allowing the front suspension to be locked for precision front linkage work or heavy breakout operations with FHPL. An automatic override restores suspension at speeds over 12 kph for comfort and safety.

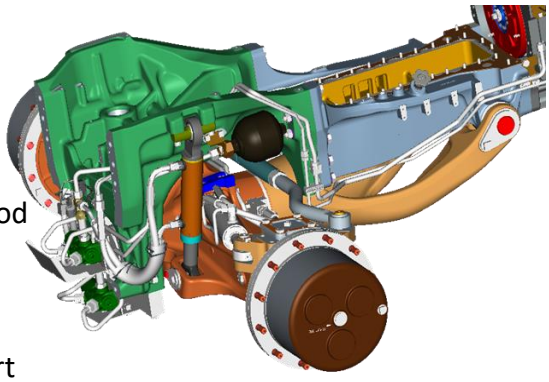

- **Turnaround Measurements:** SAE J695 (Dec 98) turning radius measures the distance from the centre point of the circle to the centre of tyre contact with the road (D) The turnaround diameter is measured from the centre point of the rear axle in line with the drawbar (E)

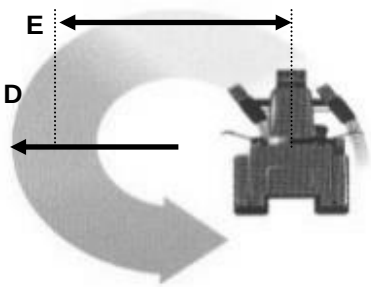

D	Turning radius (mm/ft)	
	Tyre 420/85R34 on 76" Track	
	Tyre 620/75R30 on 76" Track	7700
E	Turnaround diameter (mm/ft)	
	Tyre 420/85R34 on 76" Track	
	Tyre 620/75R30 on 76" Track	11400

- **Front Fender Options:** The front fenders are swivel type which turn against the tractors chassis, 3 options are available to match front tyre widths.

Front Fender	480mm Wide Cover
	620mm Wide Cover
	680mm Wide Cover

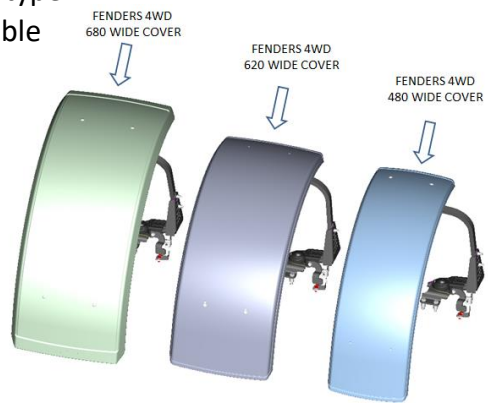

Front Axle & Rear Axle

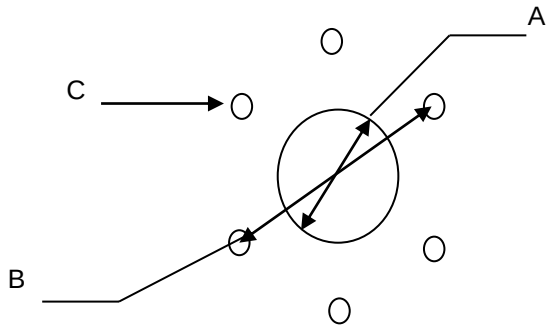

Suspended 4WD Axle		
Axle Class		4.75
Oscillation (º)		8±1 (*)
Maximum axle steering angle (º)		55
Camber angle (º)		0.5
Caster angle (º)		6
Front Final Reduction with brakes (litres)		5.00
Front Final Reduction less brakes (litres)		4.00
Inter axle ratio		1.32
4WD Suspended turns (lock to lock at 55° steer)		5.32
Flange to Flange - Class 4 (mm)		1882
A	Dia. of clearance hole (mm)	370
B	Dia. to studs (mm)	425
C	Number of studs	12
	Diameter of studs (mm)	M20x1.5
	Torque (Nm)	400

Rear Axle		
Flange axle - carry capacity		11650
Bar axle 98 inches - Carrying capacity		11650
Flange to Flange (mm) (Flange Axle)		1870
A	Dia. of clearance hole (mm)	281
B	Dia. to studs (mm)	335
C	Number of studs	10
	Diameter of studs (mm)	M22x1.5
	Torque (Nm)	500

Rear Axle

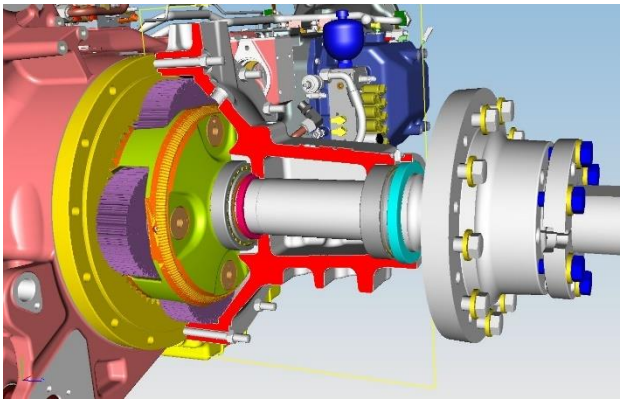

- **Rear Axle:** bar axle (98") are available, the bar is 2490mm in length.

- **Braking:** The Emergency Brake Lever is located on the floor of the cab to the left of the operators seat, The lever is spring return which moves back to the rest position (no brake requested).

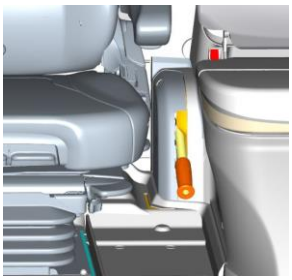

Operators Cab

- **Cab Information:** The Conforms to the requirements of OECD Code4, EEC79/622/EEC, CAN/CSA-B352 and SAE J 2194. Cab noise level is on 66dB(A).

- The right hand console is designed to place the ignition key mechanical version or an start/stop button as optional with different storage space.

- 2 storage boxes are available on the LH side as below, 'the front storage box is available also as a coolbox.

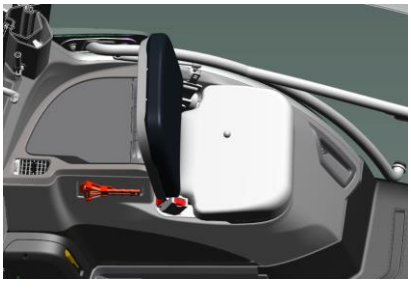

- **Power Sockets:** The T7 HD with PLM intelligence is equipped with various different types of power sockets located throughout the cabin.

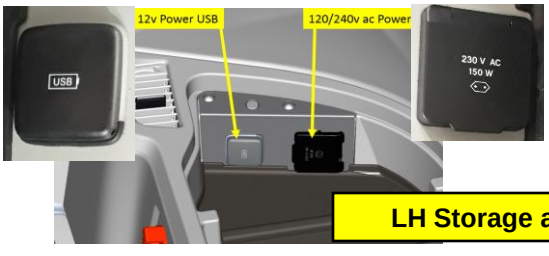

LH Storage area

RH side cab rear

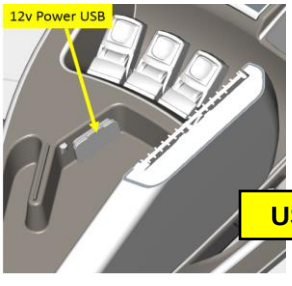

USB - under armrest

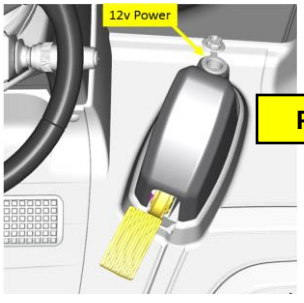

Foot Pedal apriture

Rear Power Sockets

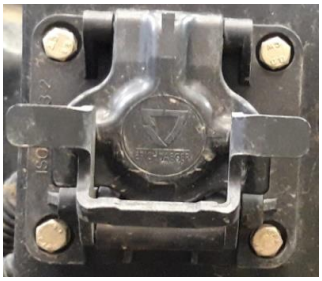

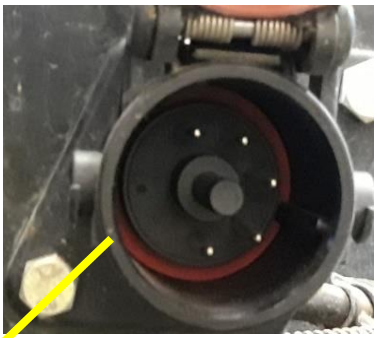

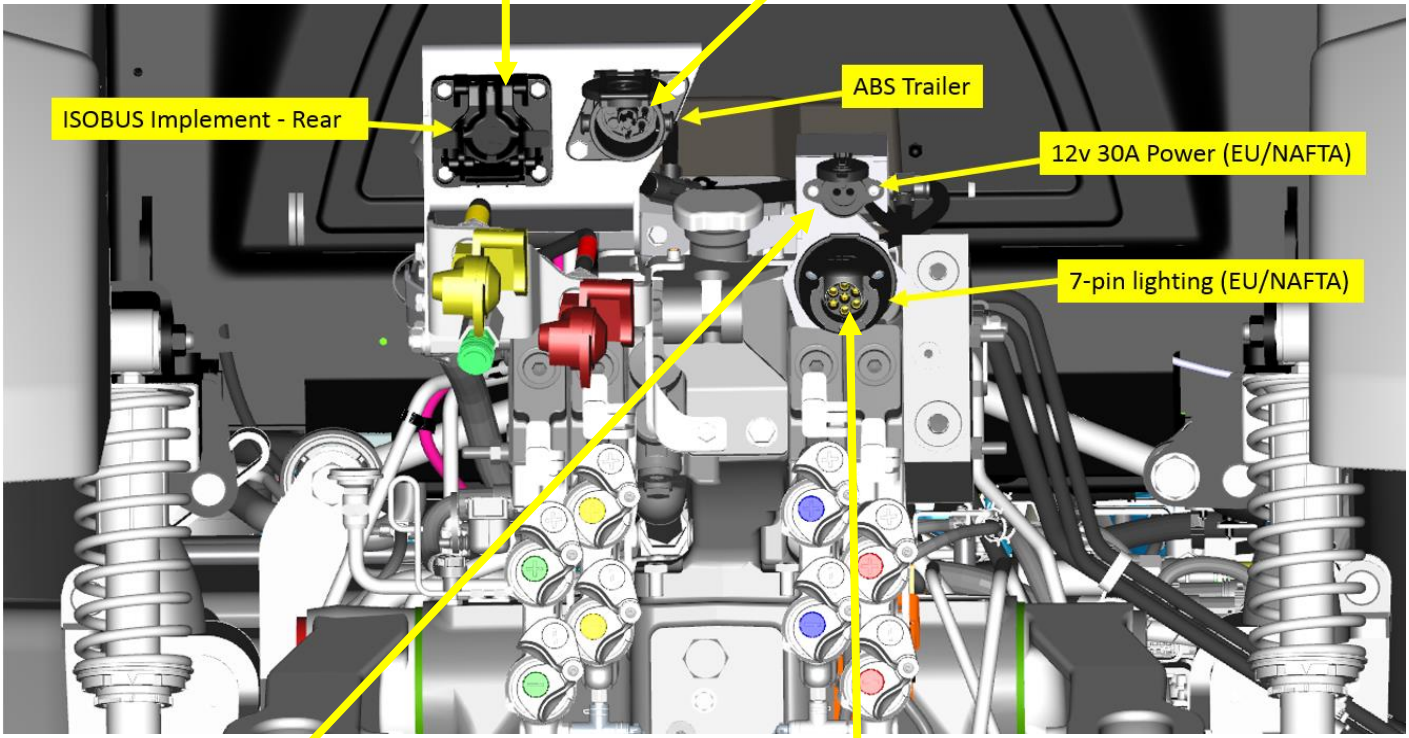

Ballast Weight

- **Rear Ballast:** A selection of rear ballast weights are available in different combinations.
  - > 180KG (2X90KG)
  - > 360KG (4X90KG)
  - > 500KG (2X250KG)
  - > 680KG (2X90KG + 2X250KG)
  - > 1000KG (4X250KG)
  - > 1180KG (4X250KG + 2X90KG)

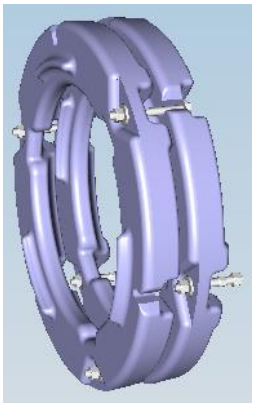

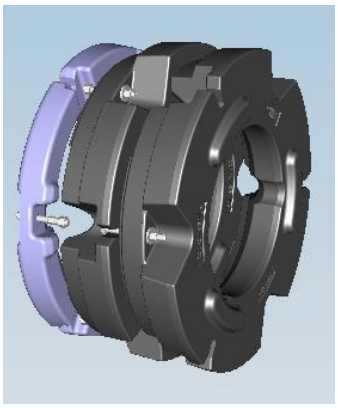

- **Front Ballast:** A selection of front ballast weights are available for direct mounting or 3 point linkage mounted.

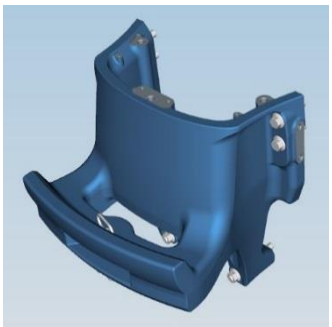

FRONT CARRIER New Holland 184 Kg

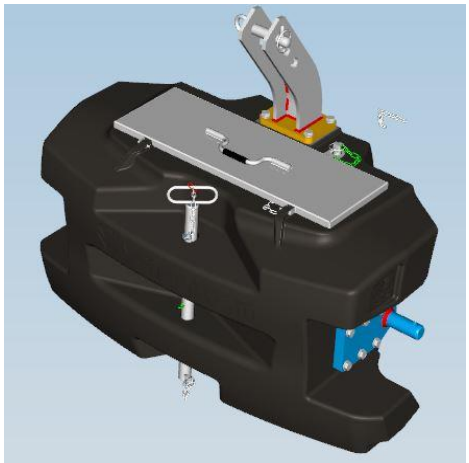

NH 1000 Kg WEIGHT

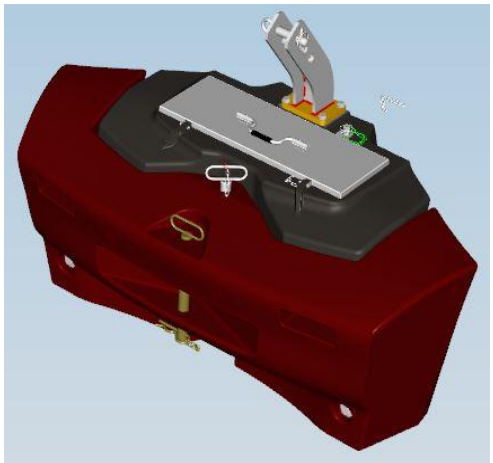

NH 2000 Kg WEIGHT

- Always remember: Correct ballast of a tractor to maintain its 60/40 weight distribution and tire pressure adjustment for the task will maximise the tractors performance in the field. (See New Holland Ballast Guide)

NEW HOLLAND
AGRICULTURE

December 2020